Volume 2 Issue 4 | December 2014 ISSN: 2320-9984 (Online)

International Journal of Modern Engineering & Management Research

Website: www.ijmemr.org

A Survey on Information Hiding using Water Marking Techniques

Mukta Bhatele
Professor & Head of the Department
Department of Computer Science Engineering
Jai Narain College of Technology (*JNCT*)
Bhopal (M.P.) [INDIA]
Email: mukta_bhatele@rediffmail.com

Prashasti Chaturvedi
M.Tech. Research Scholar
Department of Computer Science Engineering
Jai Narain College of Technology (*JNCT*)
Bhopal (M.P.) [INDIA]
Email : pprashastichaturvedi@gmail.com

Raghvendra Singh Tomar
Assistant Professor
Department of Computer Science Engineering
Jai Narain College of Technology (*JNCT*)
Bhopal (M.P.) [INDIA]
Email: raghvendra01@gmail.com

Abstract*—Watermarking is a technique of hiding some secretes information so that the information can't be accessed from the external users. Watermarking enable hiding secretes information into image and sends the image to the respective receiver. There are various techniques implemented for the watermarking such as using spread spectrum where the information is hiding on the basis of dividing image into blocks and information is hiding at each of the block level. Here in this paper a survey of all such techniques that is implemented for the information hiding using watermarking techniques.*

Keywords:— *Compressed and Encrypted Domain Watermarking, JPEG2000 Watermarking, Robust.*

1. INTRODUCTION

A watermark is a pattern of bits inserted into multimedia data such as digital image, audio or video file that helps to identify the file's copyright information (author, rights, etc.). A simple example of a digital watermark may be a visible signature or seal placed over an image to determine the owner of that image. The name "watermark" is derived from the faintly visible marks imprinted on organisational stationery.

Information hiding is a technique that allows the information to be hide inside the image so that the secrete information is made secrete from UN-authorized users.

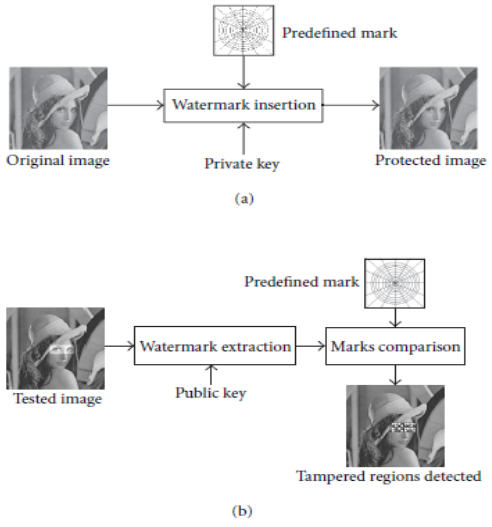

Figure 1. Basic technique of watermarking

The main advantages of this method are that it does not produce visible changes in the image and provides a very high probability of tamper detection. For example, if we swap only two pixels of any block, the check-sum

will be modified because each pixel *pj* of the block is multiplied by a different coefficient *aj*. Furthermore the random walk of the pixels *pj* and the coefficients *aj* are block dependent, thus making it impossible to swap or duplicate entire blocks without making undetected changes.

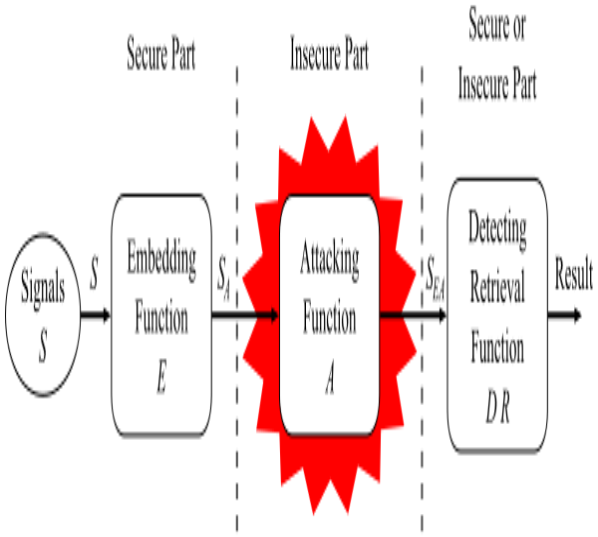

Figure 2. Phases of Watermarking

2. RELATED WORK

In 2012, A. V. Subramanyam, Sabu Emmanuel [3] proposes a robust watermarking technique for jpeg2000 image. The technique uses the concept of first encrypted the image using RC4 encryption technique and then applying jpeg200 compression for the image compression and hence applying watermarking embedding in the compressed image. Here in this paper three watermark techniques are given based on Spread Spectrum (SS), Scalar Costa Scheme Quantization Index Modulation (SCS-QIM), and Rational Dither Modulation (RDM).

In 2010 by A. V. Subramanyam, Sabu Emmanuel, Mohan S. Kankanhalli [4] proposed an efficient way of embedding the watermarking either by first applying the compression or encryption and is performed on jpeg2000 image. The techniques provide detection of the watermarking at the time of the compression or encryption of the image. The technique is simple to implement and is efficient as per security is concerned. The technique uses jpeg2000 compression algorithm for the compression of image and stream cipher using RC4 is used for the encryption of the image and the watermark signal generation and detection is done by using spread spectrum technique.

In 2012 by Anamitra Makur, Nikhil Narayan S. [5] proposes a watermarking technique including DCT based compression as an application for the image tempering. The technique uses spread spectrum based watermarking technique which is a fragile watermarking technique. The idea is to detect tamper and provides recovery of images where we do not require authentication bits.

In 2009 by Shiraz Ahmad [6] "Feature-based Watermarking using Discrete Orthogonal Hahn Moment Invariants" proposed a new robust technique for the watermark images that may be attacked using some geometric transformation of image such as scaling or rotation. The watermarked embedding can be easily detection by transformation of image. Hence proposes a technique to prevent from such attacks by using scale invariant feature transform based bounding boxes and moment-invariant for the watermark embedding which can prevent from geometric attacks.

In 2012, a water mark technique is proposed which is used for the recovery of tampered documents [7]. The technique is used for the recovery of the documents using pixel flipping and then self embedding so that the authentication is achieved. This technique recovers against all types of attacks possible in tampered document such as insertion or substitution or deletion.

In 2012, Soumya Mukherjee, Arup Kumar Pal proposed a new technique of water marking using the combinatorial method of discrete wavelet transform and singular value decomposition on gray scale images. The technique implemented here for watermarking is suitable to prevent the gray images from various attacks such as nosing, cropping or image enhancement.

In 2012, digital video watermarking has been proposed[9]. Although there many watermarking techniques implemented for the video, here a new technique has been implemented where the video is first divide into a number of frames and a key is used which is applied on each frame for the encryption of the frames and the same key is then applied for the decryption of video frames and the frames are then arranged to get the original video in a secure way.

In 2012, a digital image watermarking technique has been implemented [10] in which One quad tree based approach is used to select the region of interest (ROI) and then to utilize the properties of the singular value decomposition (SVD) transform to hide the watermark is being proposed here.

In 2012, a blind watermarking technique has been proposed using the concept of DCT [11]. Here the watermarking using DCT can be given by calculating correlation coefficient between the extracted coefficient of the watermarked image and then the partial watermark values that are known are calculated.

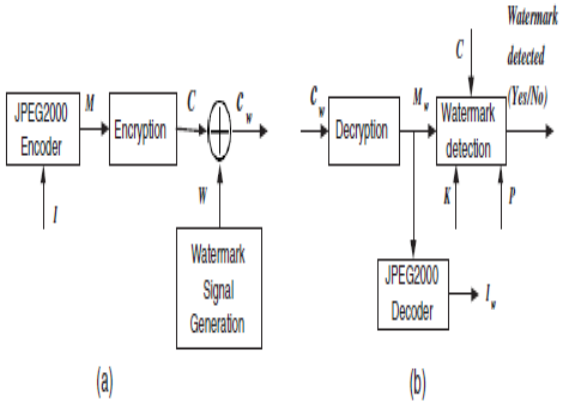

Figure 3. Watermarking Embedding & Extraction

3. CONCLUSION

Here in this paper a complete survey of all the techniques that are used for watermarking is analyzed and discussed here. Since various watermarking techniques are implemented for the hiding of information such that embedding and extraction of information can be done easily. Here with use of various advantages and their limitations of watermarking technique a new and efficient technique for watermarking is implemented in future.

REFERENCES

[1] Jana Dittmann, Martin Steinebach "Watermarking based digital audio data authentication", EURASIP Journal on Applied Signal Processing, Volume 2003, pp. 1001 – 1015, January 2003.

[2] Jatinder Kumar, Shailendra Singh "Study of Image Authentication Algorithms", Proceedings of National Conference on Challenges & Opportunities in Information Technology (COIT-2007), pp. 215-220, 2007.

[3] A. V. Subramanyam, Sabu Emmanuel, Member, IEEE, and Mohan S. Kankanhalli, Senior Member, IEEE," Robust Watermarking of Compressed and Encrypted JPEG2000 Images",IEEE 2012.

[4] A. V. Subramanyam, Sabu Emmanuel, Mohan S. Kankanhalli, "compressed-encrypted domain jpeg2000 image watermarking." School of Computer Engineering, Nanyang Technological University, Singapore School of Computing, National University of Singapore, Singapore, 978-1-4244-7493-6/10/ $26.00c 2010 IEEE.

[5] Anamitra Makur, Nikhil Narayan S. "Tamper-Proof Image Watermarking using Self-Embedding" Electrical & Electronic Nanyang Technological University, Singapore, acm-2012.

[6] Shiraz Ahmad "Feature-based Watermarking using Discrete

Orthogonal Hahn Moment Invariants" Proceedings of the 7th International Conference on Frontiers of Information Technology (FIT-09), Article No. 38, 2009.

[7] Anamitra Makur, Govindarajan Sridharan," Watermark based Recovery of Tampered Documents", ACM 2012.

[8] Soumya Mukherjee, Arup Kumar Pal," A DCT-SVD based Robust Watermarking Scheme for Grayscale Image", ACM 2012.

[9] Ujan Mukhopadhyay, Souptik Sinha, Poulomi Ghosh, Rilok Ghosh, Dipak kr. Kole and Aruna Chakroborty," Enhancing the Security of Digital Video Watermarking using Watermark Encryption", ACM 2012.

[10] Priyanka Singh, Suneeta Agarwal," A Region Specific Robust Watermarking Scheme Based on Singular Value Decomposition", ACM 2012.

[11] Reena Gunjan, Vijay Laxmi, Manoj S. Gaur," Detection Attack Analysis using Partial Watermark in DCT Domain", ACM 2012.